Drawing Title: LS-MD-040-01

Lynx™ Mold Deflection Sensor LS-MD-040 Installation—Sensor and Optional Cable Stacker Dimensions

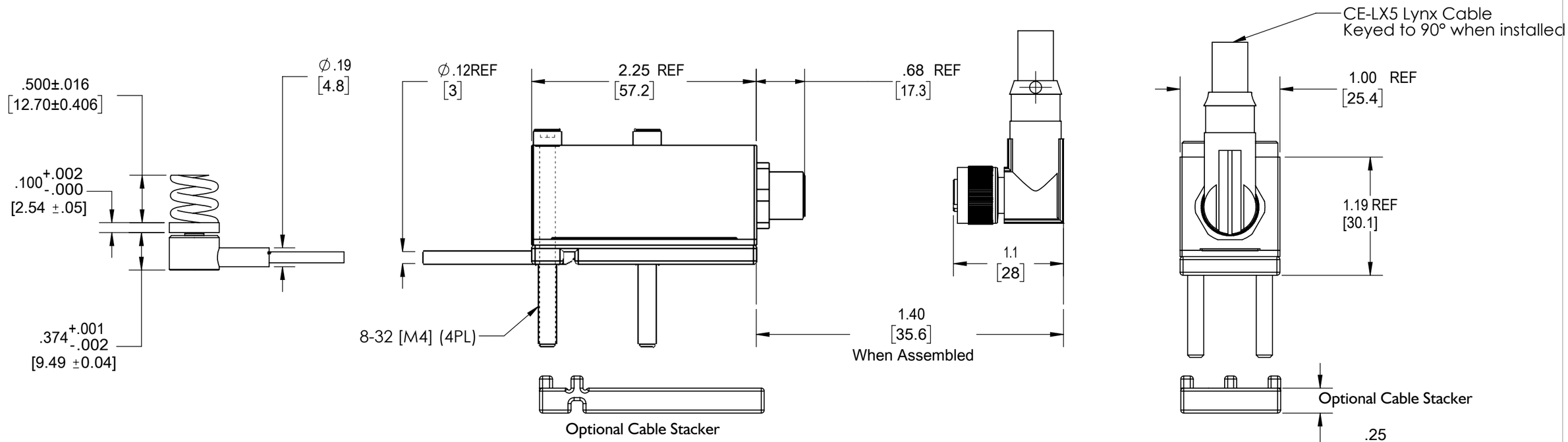

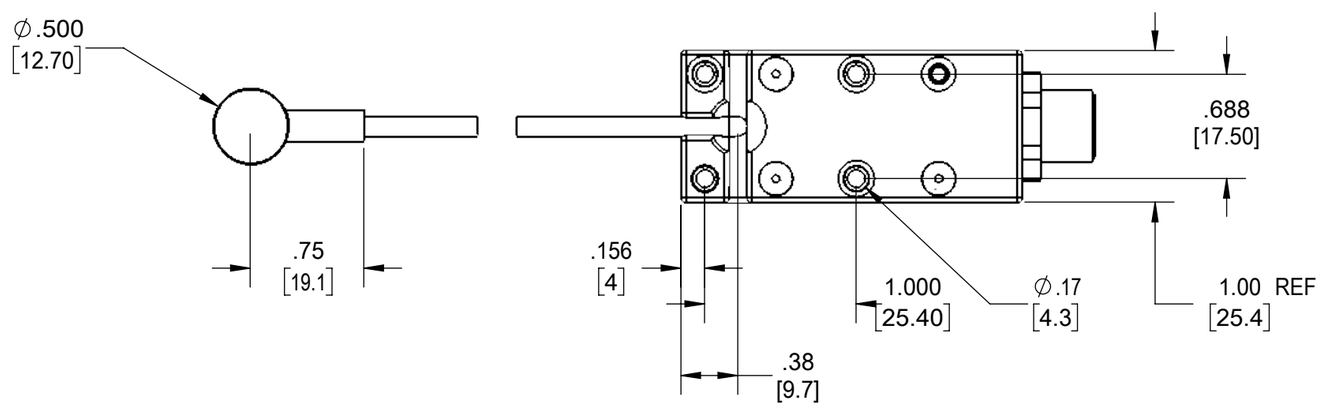

CABLE STACKERS	SCREW LENGTH	CABLE STORED
1	1.75 [45.0]	6.00" [152.4]
2	2.00 [50.0]	12.00" [304.8]
3	2.25 [57.0]	18.00" [457.2]
4	2.50 [64.0]	24.00" [609.6]

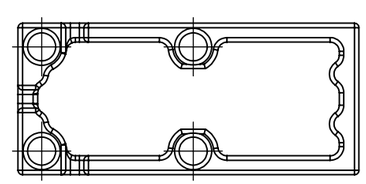

Optional Cable Stacker accomodates up to 4.0" [101.6] of extra cable.

NOTES:
1. ENCLOSED EJECTOR BOX SUGGESTED.
2. DO NOT SCALE PRINT
3. BREAK ALL SHARP EDGES, 0.005 [0.03] R MAX
4. DIMENSIONS IN INCHES [MM], UNLESS NOTED
5. TOLERANCES UNLESS SPECIFIED:
   XXX = ±0.003 [0.08]
   XX = ±0.01 [0.3]
   ANGLES = ±3° 30'

RJG MOLD SMART
3111 Park Street, Traverse City, MI 49686
231-946-2111 | www.rjg.com

Description: LS-MD-040 Sensor Installation	
Drawn: K.J.Brettschneider	
Design:	
Check: M.Groleau	
Date: 02.04.2022	

Drawing Title: LS-MD-040-02

Lynx™ Mold Deflection Sensor LS-MD-040 Installation

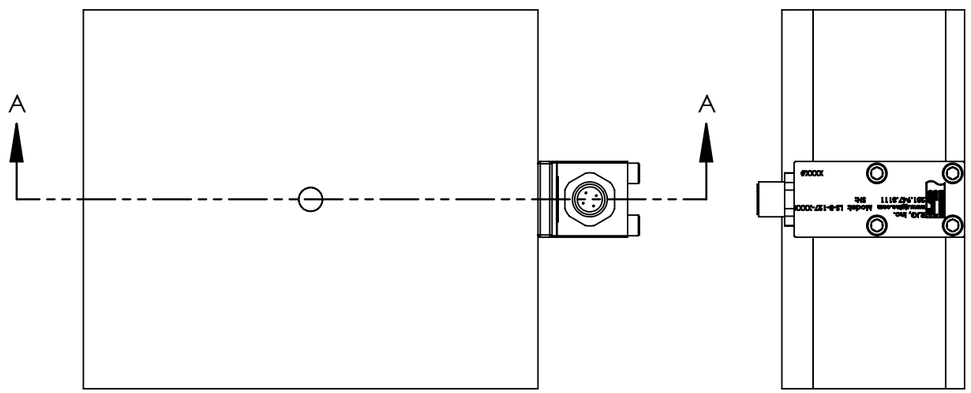

VIEW -

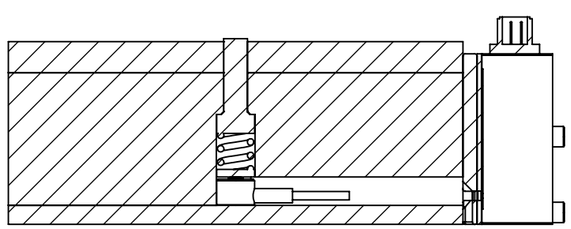

SECTION A-A

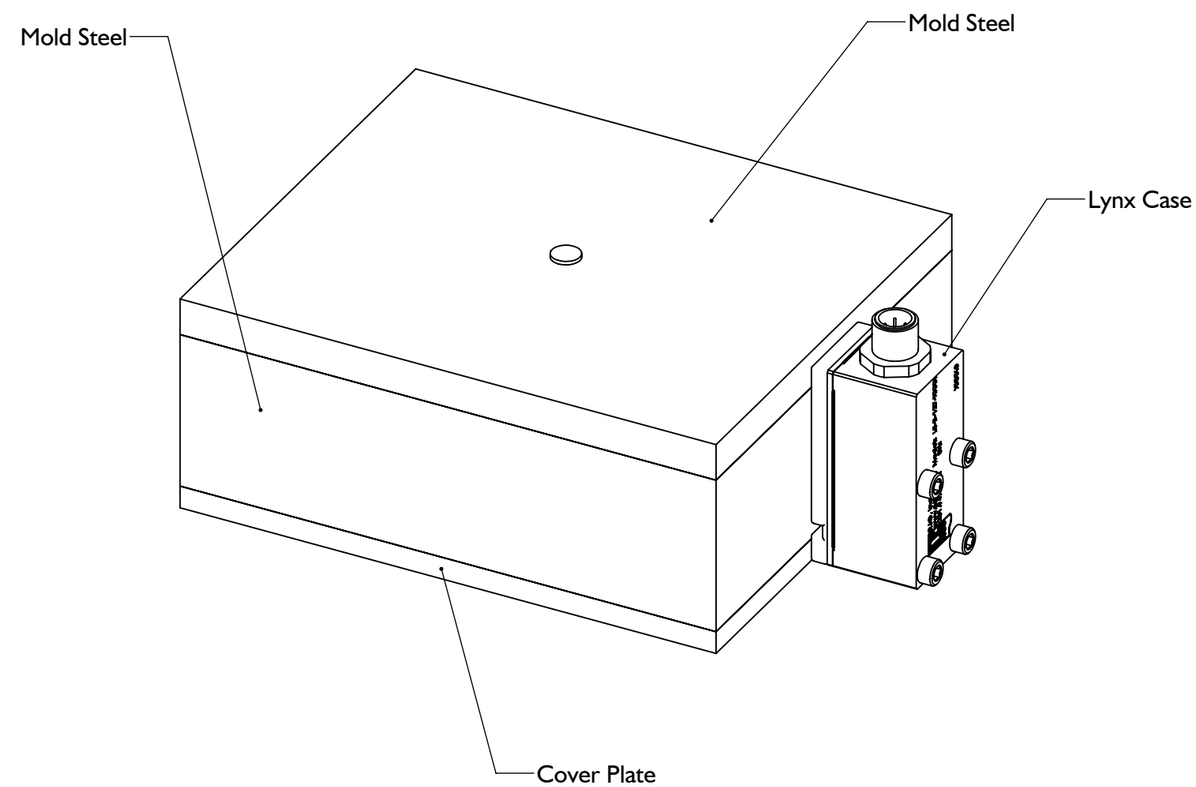

NOTES:
1. ENCLOSED EJECTOR BOX SUGGESTED.
2. DO NOT SCALE PRINT
3. BREAK ALL SHARP EDGES, 0.005 [0.03] R MAX
4. DIMENSIONS IN INCHES [MM], UNLESS NOTED
5. TOLERANCES UNLESS SPECIFIED:
   XXX = ±0.003 [0.08]
   XX = ±0.01 [0.3]
   ANGLES = ±3° 30°

RJG MOLD SMART	Description: LS-MD-040 Sensor Installation
	Drawn: K.J.Brettschneider
	Design:
	Check: M.Groleau
	Date: 02.04.2022

Drawing Title: LS-MD-040-03

Lynx™ Mold Deflection Sensor LS-MD-040 Installation

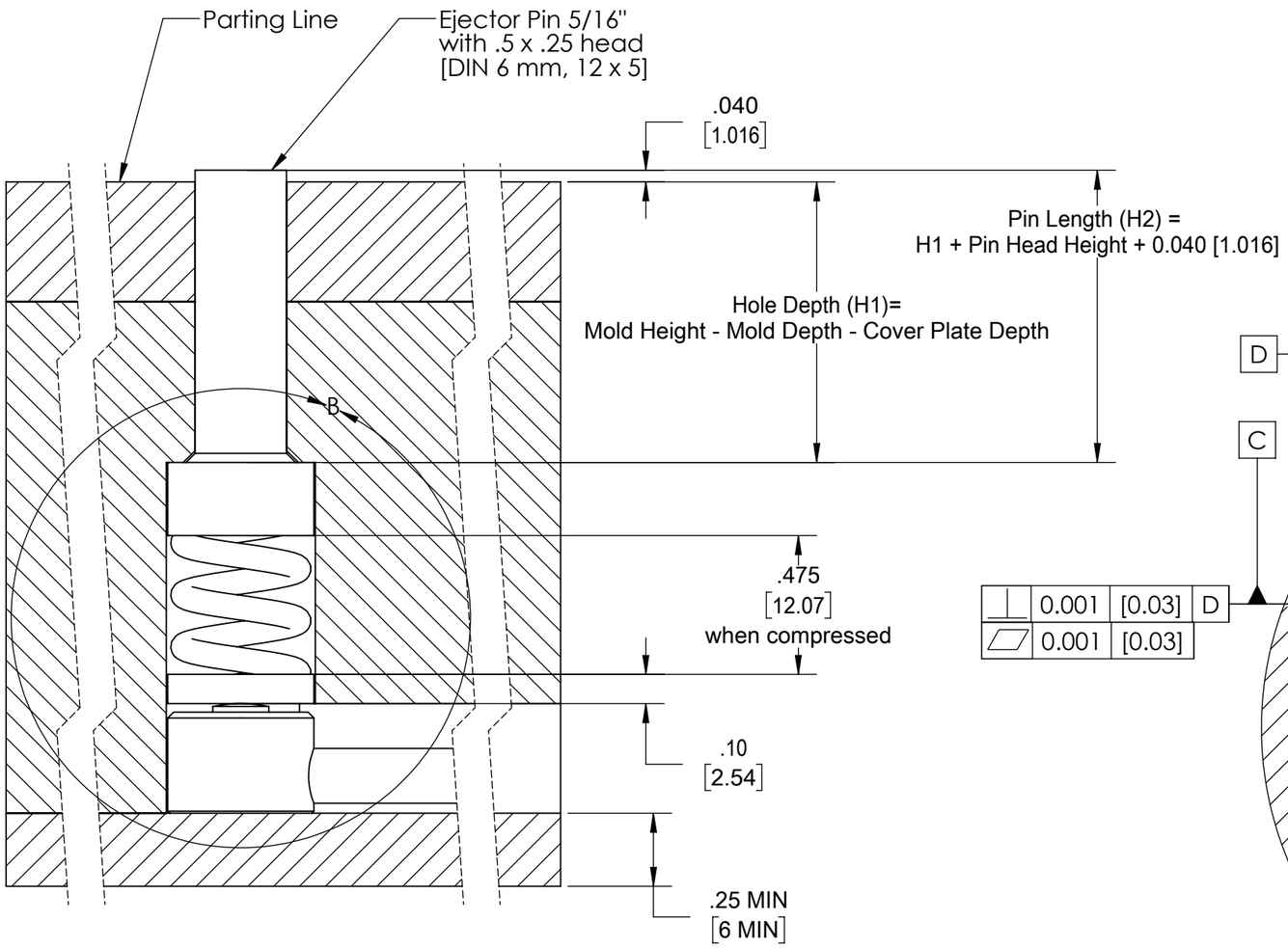

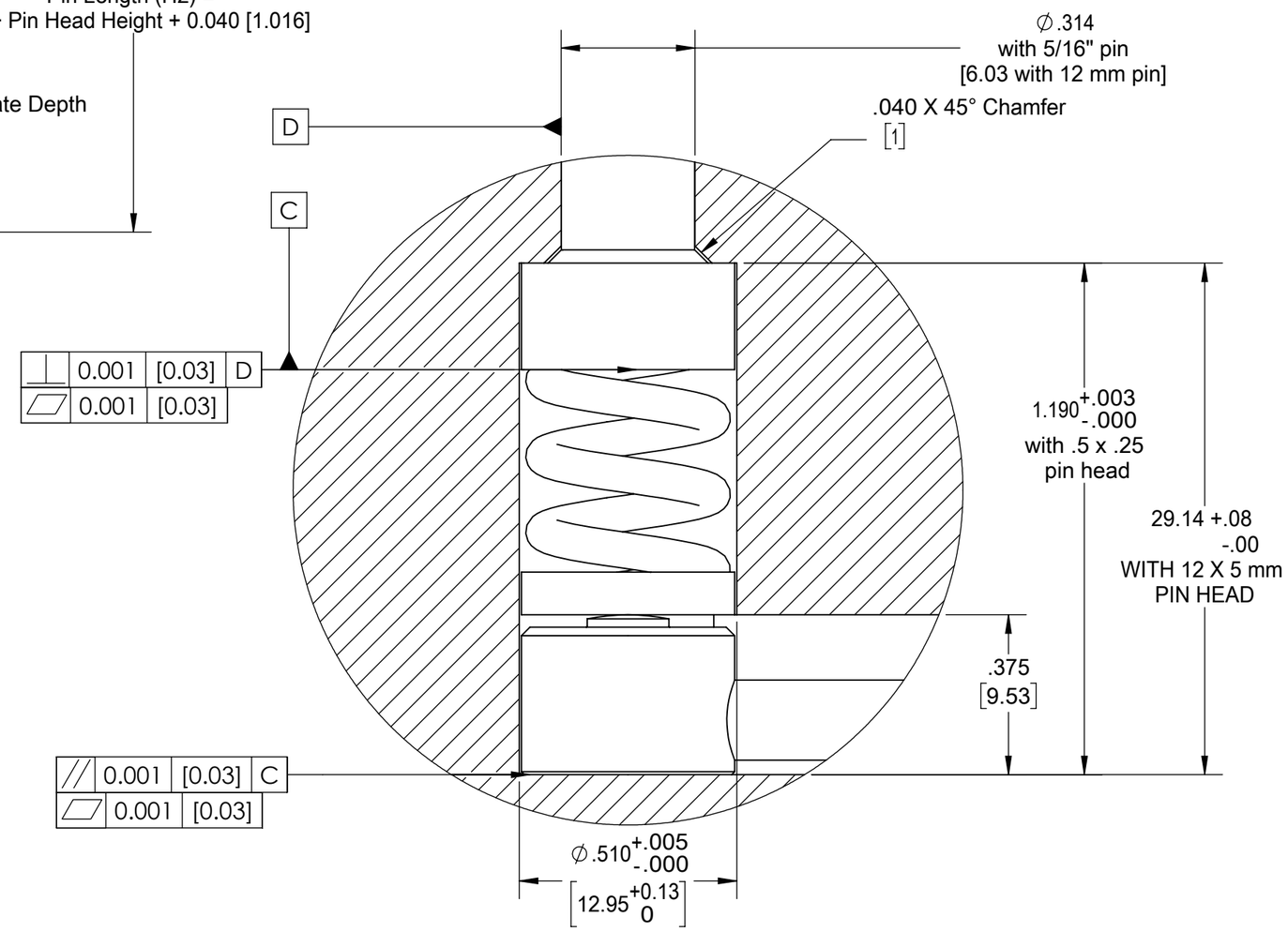

DETAIL B
SCALE 3 : 1

NOTES:
1. ENCLOSED EJECTOR BOX SUGGESTED.
2. DO NOT SCALE PRINT
3. BREAK ALL SHARP EDGES, 0.005 [0.03] R MAX
4. DIMENSIONS IN INCHES [MM], UNLESS NOTED
5. TOLERANCES UNLESS SPECIFIED:
   XXX = ±0.003 [0.08]
   XX = ±0.01 [0.3]
   ANGLES = ±3° 30°

RJG MOLD SMART
3111 Park Street Traverse City, MI 49686
231-947-2111 | www.rjg.com

Description: LS-MD-040 Sensor Installation	
Drawn: K.J.Brettschneider	
Design:	
Check: M.Groleau	
Date: 02.04.2022	

Drawing Title: LS-MD-040-04

Lynx™ Mold Deflection Sensor LS-MD-040 Installation—Lynx™ Case Installation

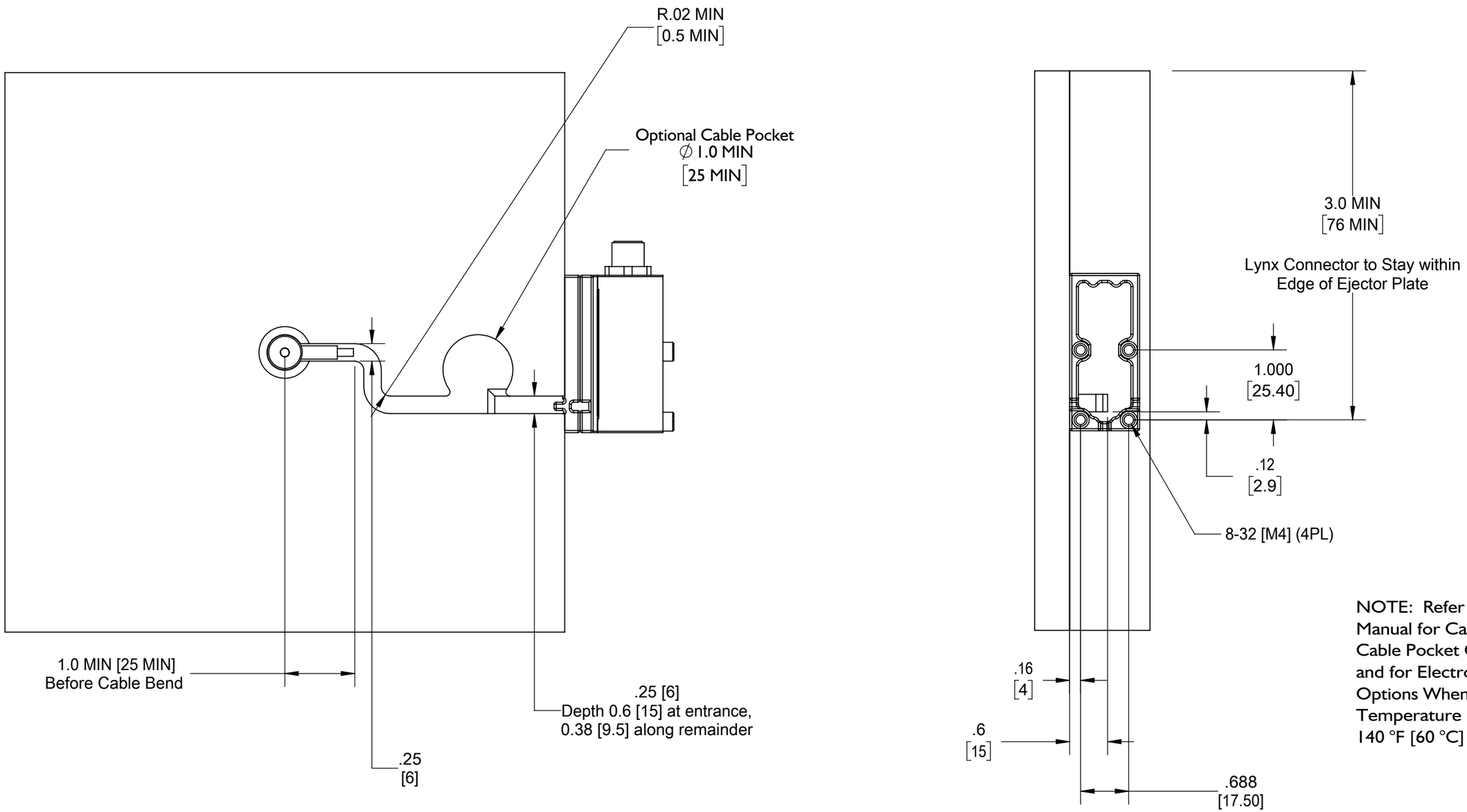

NOTE: Refer to Product Manual for Cable Channel and Cable Pocket Cover Options and for Electronics Mounting Options When Mold Temperature is Greater Than 140 °F [60 °C]

NOTES:
1. ENCLOSED EJECTOR BOX SUGGESTED.
2. DO NOT SCALE PRINT
3. BREAK ALL SHARP EDGES, 0.005 [0.03] R MAX
4. DIMENSIONS IN INCHES [MM], UNLESS NOTED
5. TOLERANCES UNLESS SPECIFIED:
   XXX = ±0.003 [0.08]
   XX = ±0.01 [0.3]
   ANGLES = ±3° 30°

RJG MOLD SMART
3111 Park Street, Traverse City, MI 49686
231-946-3111 | www.rjg.com

Description: LS-MD-040 Sensor Installation	
Drawn: K.J.Brettschneider	
Design:	
Check: M.Groleau	
Date: 02.04.2022	