Drawing Title: LS-B-127-XXXX-01

LS-B-127-XXXX Single-Channel Sensor Installation—Sensor and Optional Cable Stacker Dimensions

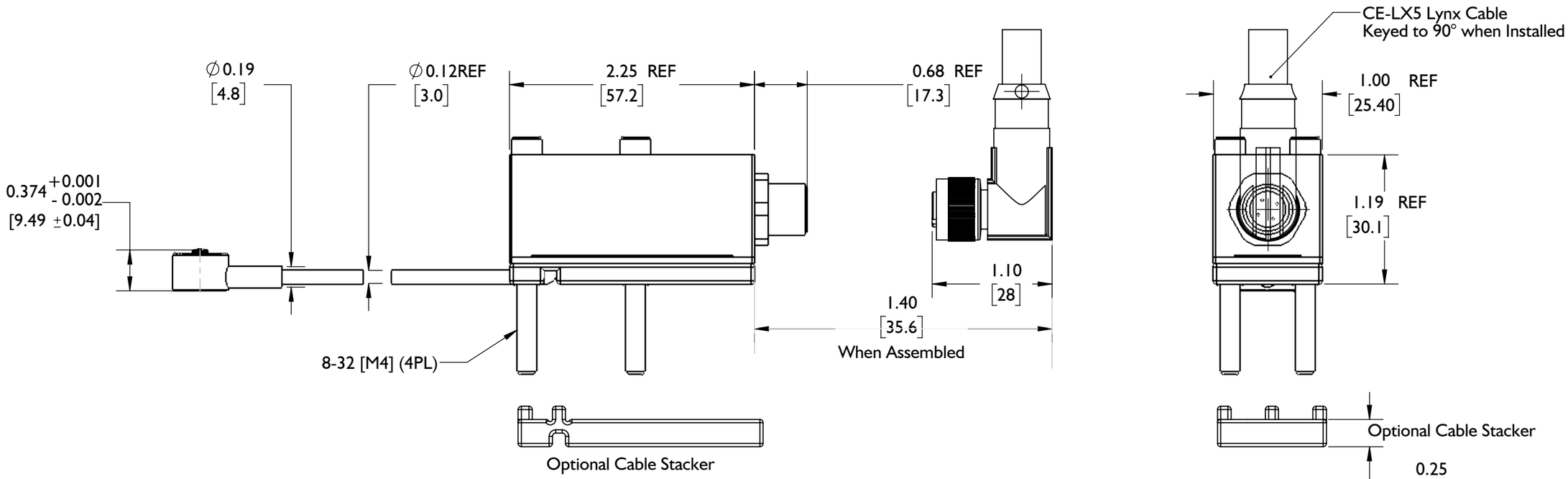

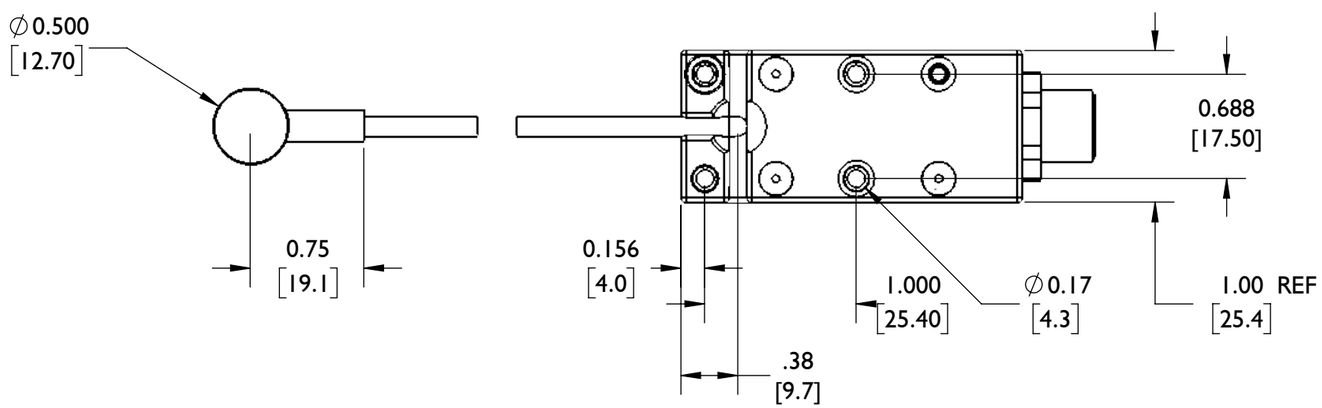

CABLE STACKERS	SCREW LENGTH	CABLE STORED
1	1.75 [45.0]	6.00" [152.4]
2	2.00 [50.0]	12.00" [304.8]
3	2.25 [57.0]	18.00" [457.2]
4	2.50 [64.0]	24.00" [609.6]

NOTES:
1. CLAMP PLATE APPLICATIONS REQUIRE GUIDED EJECTION
2. EJECTOR AND TRANSFER PIN CONCENTRICITY MUST BE WITHIN 0.030" [0.76] OR 10% OF EJECTOR PIN DIA, WHICHEVER IS SMALLER.
3. ENCLOSED EJECTOR BOX SUGGESTED.
4. DO NOT SCALE PRINT
5. BREAK ALL SHARP EDGES, 0.005 [0.03] R MAX
6. DIMENSIONS IN INCHES [MM], UNLESS NOTED
7. TOLERANCES UNLESS SPECIFIED:
   XXX = ±0.003 [0.08]
   XX = ±0.01 [0.3]
   ANGLES = ±3° 30°

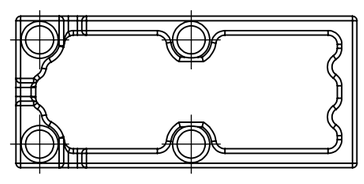

Optional Cable Stacker accomodates up to 4.0" [101.6] of extra cable.

RJG, Inc.
3111 Park Drive
231-947-3111
www.rjginc.com

Description: LS-B-127-XXXX Sensor Dimensions
Drawn: K.J.Brettschneider
Design:
Check: M.Groleau
Date: 07.21.2022

Drawing Title: LS-B-127-XXXX-02

LS-B-127-XXXX Single-Channel Sensor Installation—Clamp Plate Installation

CLAMP PLATE INSTALLATION FOR PINS ≤ ⌀0.25 [7.0]; PINS >⌀0.25 [7.0] USE HEAD-TO-HEAD INSTALLATION ON SHEET LS-B-127-XXXX-04 & -05.

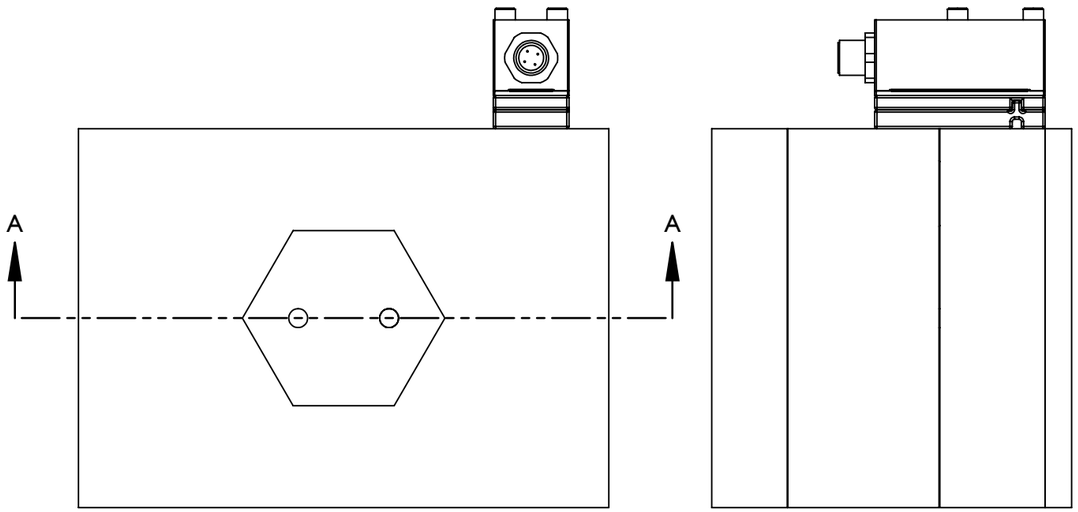

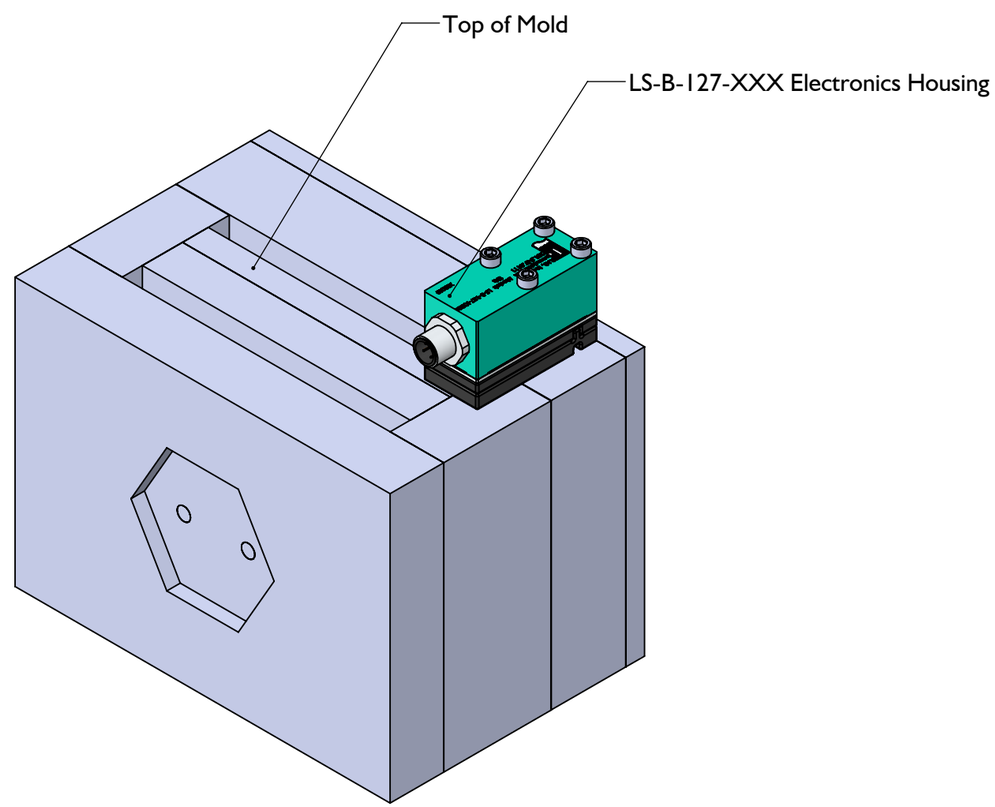

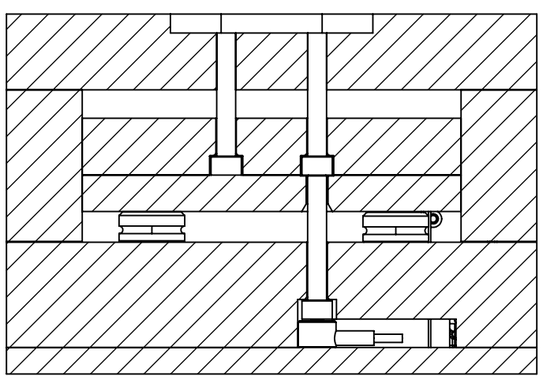

SECTION A-A
SCALE 1 : 2

NOTES:
1. CLAMP PLATE APPLICATIONS REQUIRE GUIDED EJECTION
2. EJECTOR AND TRANSFER PIN CONCENTRICITY MUST BE WITHIN 0.030" [0.76] OR 10% OF EJECTOR PIN DIA, WHICHEVER IS SMALLER.
3. ENCLOSED EJECTOR BOX SUGGESTED.
4. DO NOT SCALE PRINT
5. BREAK ALL SHARP EDGES, 0.005 [0.03] R MAX
6. DIMENSIONS IN INCHES [MM], UNLESS NOTED
7. TOLERANCES UNLESS SPECIFIED:
   XXX = ±0.003 [0.08]
   XX = ±0.01 [0.3]
   ANGLES = ±3° 30°

RJG, Inc.
3111 Park Drive
231-947-3111
www.rjginc.com

Description: LS-B-127-XXXX Sensor Installation	
Drawn: K.J.Brettschneider	
Design:	
Check: M.Groleau	
Date: 07.21.2022	

Drawing Title: LS-B-127-XXXX-03

LS-B-127-XXXX Single-Channel Sensor Installation—Clamp Plate Installation

CLAMP PLATE INSTALLATION FOR PINS ≤ ⌀0.25 [7.0]; PINS >⌀0.25 [7.0] USE HEAD-TO-HEAD INSTALLATION ON SHEET LS-B-127-XXXX-04 & -05.

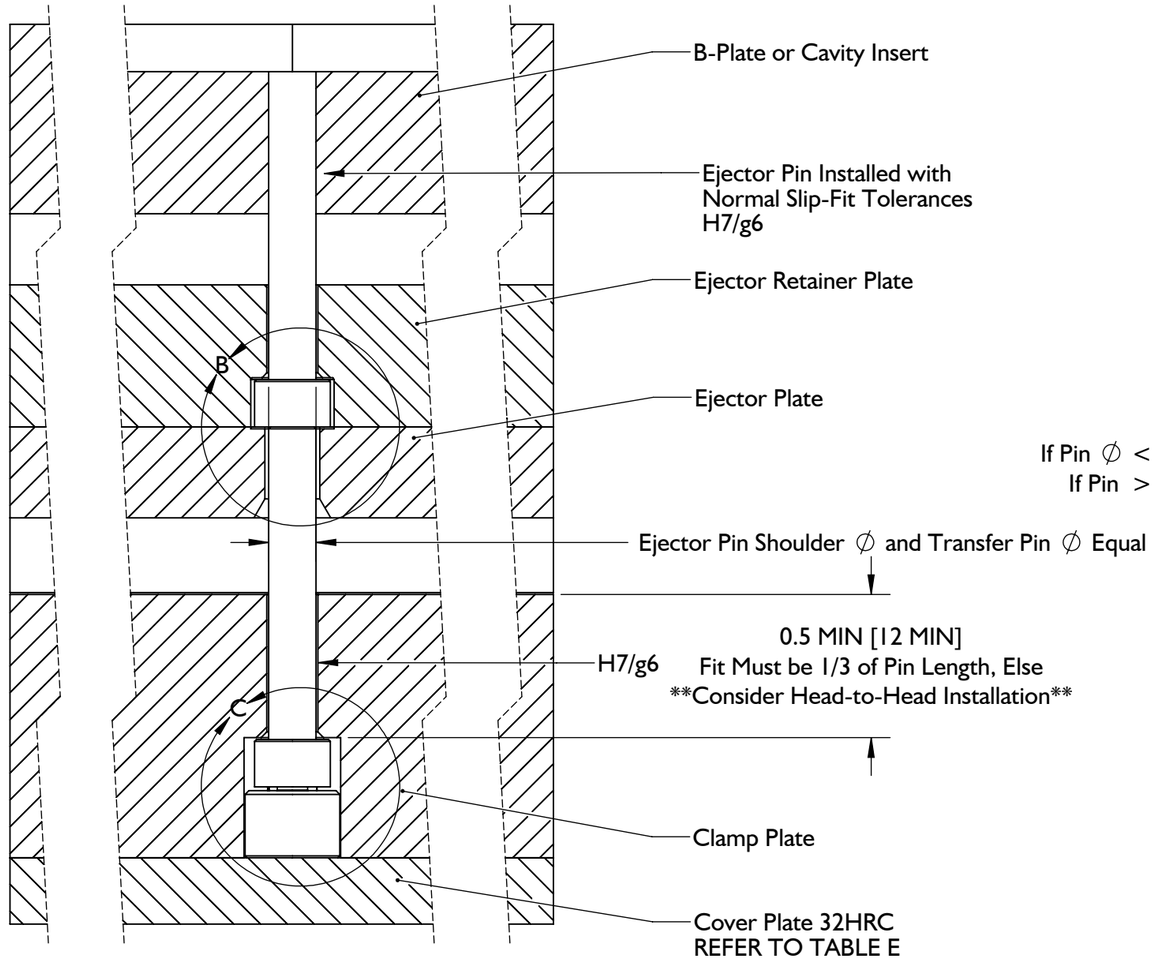

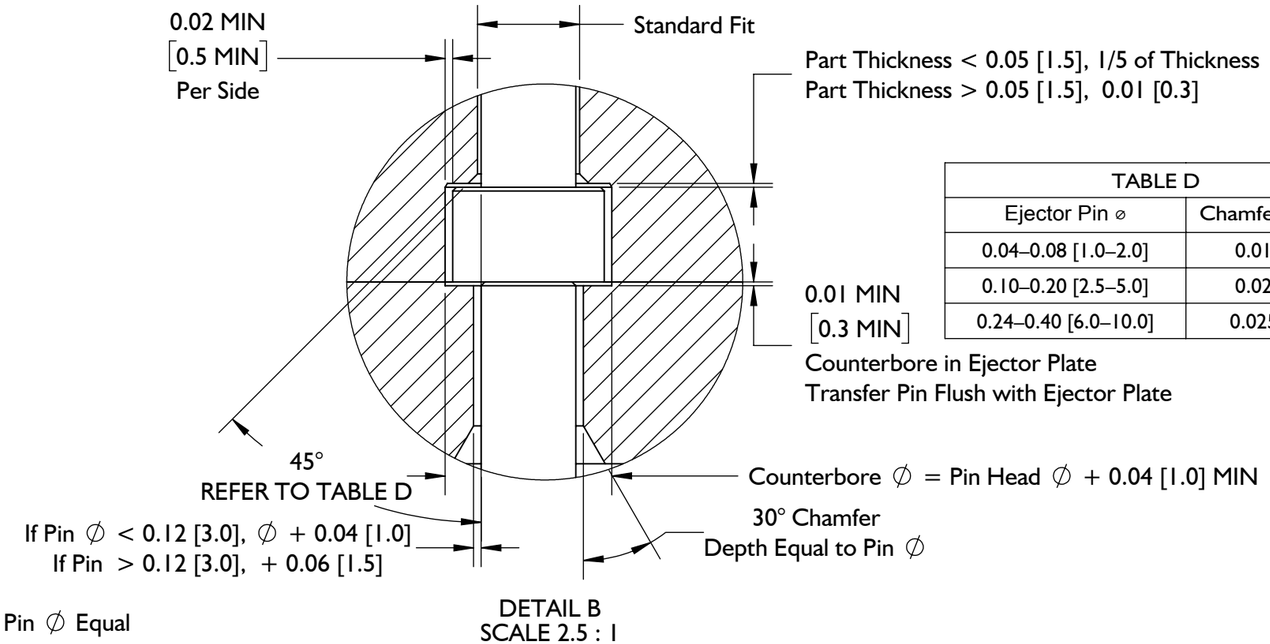

DETAIL B
SCALE 2.5 : 1

TABLE D	
Ejector Pin ⌀	Chamfer Length
0.04–0.08 [1.0–2.0]	0.01 [0.3]
0.10–0.20 [2.5–5.0]	0.02 [0.4]
0.24–0.40 [6.0–10.0]	0.025 [0.6]

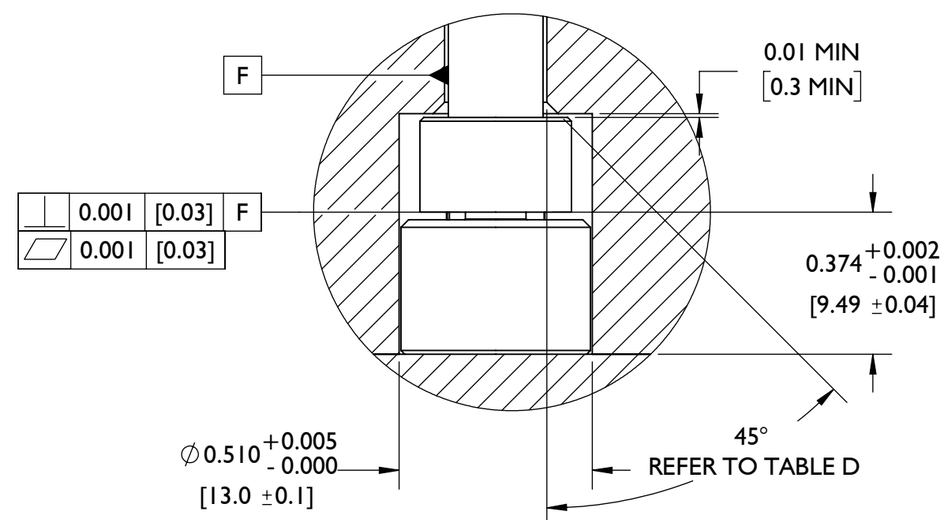

DETAIL C
SCALE 2.5 : 1

NOTES:
1. CLAMP PLATE APPLICATIONS REQUIRE GUIDED EJECTION
2. EJECTOR AND TRANSFER PIN CONCENTRICITY MUST BE WITHIN 0.030" [0.76] OR 10% OF EJECTOR PIN DIA, WHICHEVER IS SMALLER.
3. ENCLOSED EJECTOR BOX SUGGESTED.
4. DO NOT SCALE PRINT
5. BREAK ALL SHARP EDGES, 0.005 [0.03] R MAX
6. DIMENSIONS IN INCHES [MM], UNLESS NOTED
7. TOLERANCES UNLESS SPECIFIED:
   XXX = ±0.003 [0.08]
   XX = ±0.01 [0.3]
   ANGLES = ±3° 30'

TABLE E	
Sensor Model	MIN Plate Thickness
LS-B-127-50	0.2 [5]
LS-B-127-125	0.2 [5]
LS-B-127-500	0.25 [6.0]
LS-B-127-2000	0.25 [6.0]

Refer to Product Manual for Cover Plate Alternatives

RJG, Inc.
3111 Park Drive
231-947-3111
www.rjginc.com

Description: LS-B-127-XXXX Sensor Installation	
Drawn: K.J.Brettschneider	
Design:	
Check: M.Groleau	
Date: 07.21.2022	

Drawing Title: LS-B-127-XXXX-04

LS-B-127-XXXX Single-Channel Sensor Installation—Head-to-Head Installation

CLAMP PLATE INSTALLATION FOR PINS ≤ ⌀0.25 [7.0]; PINS >⌀0.25 [7.0] USE HEAD-TO-HEAD INSTALLATION .

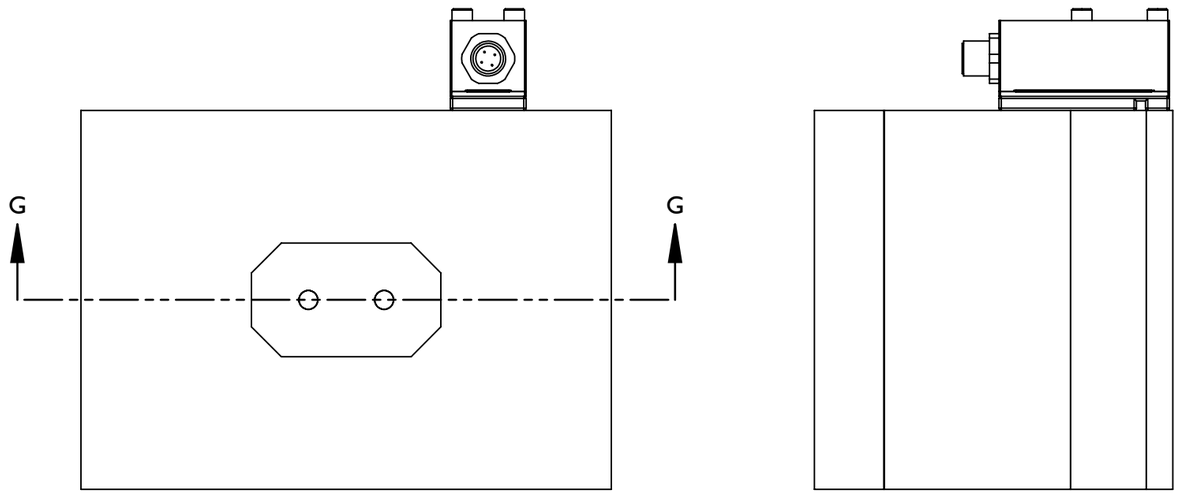

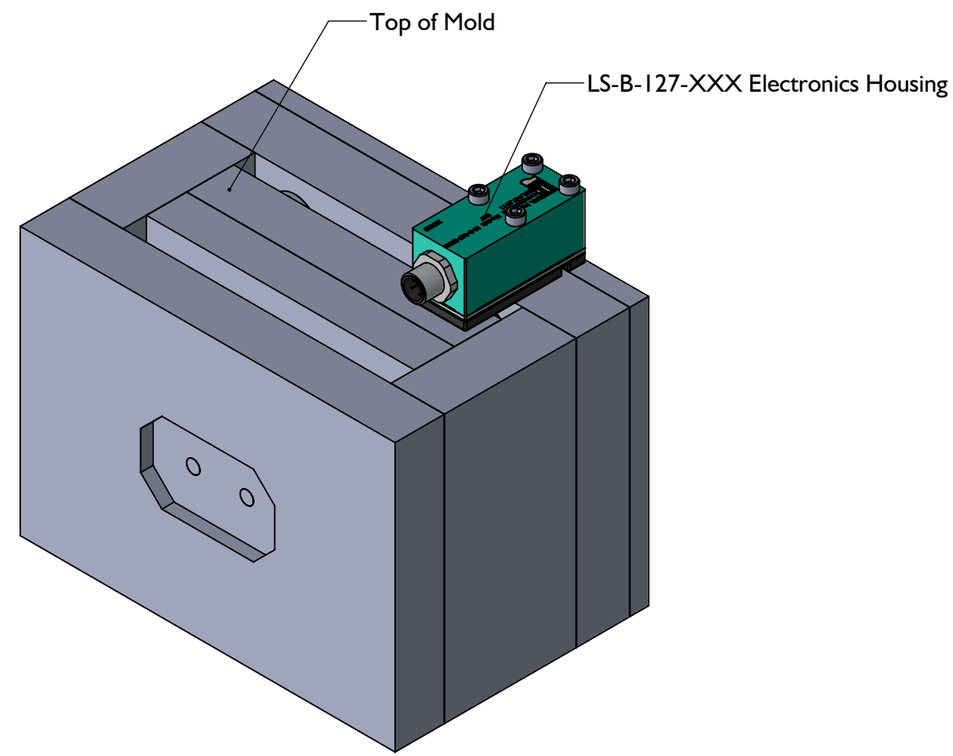

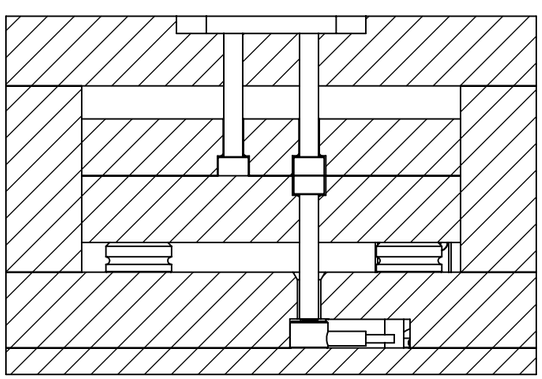

SECTION G-G

NOTES:
1. CLAMP PLATE APPLICATIONS REQUIRE GUIDED EJECTION
2. EJECTOR AND TRANSFER PIN CONCENTRICITY MUST BE WITHIN 0.030" [0.76] OR 10% OF EJECTOR PIN DIA, WHICHEVER IS SMALLER.
3. ENCLOSED EJECTOR BOX SUGGESTED.
4. DO NOT SCALE PRINT
5. BREAK ALL SHARP EDGES, 0.005 [0.03] R MAX
6. DIMENSIONS IN INCHES [MM], UNLESS NOTED
7. TOLERANCES UNLESS SPECIFIED:
   XXX = ±0.003 [0.08]
   XX = ±0.01 [0.3]
   ANGLES = ±3° 30°

RJG, Inc.
3111 Park Drive
231-947-3111
www.rjginc.com

Description: LS-B-127-XXXX Sensor Installation	
Drawn: K.J.Brettschneider	
Design:	
Check: M.Groleau	
Date: 07.21.2022	

Drawing Title: LS-B-127-XXXX-05

LS-B-127-XXXX Single-Channel Sensor Installation—Head-to-Head Installation

CLAMP PLATE INSTALLATION FOR PINS ≤ ⌀0.25 [7.0]; PINS >⌀0.25 [7.0] USE HEAD-TO-HEAD INSTALLATION .

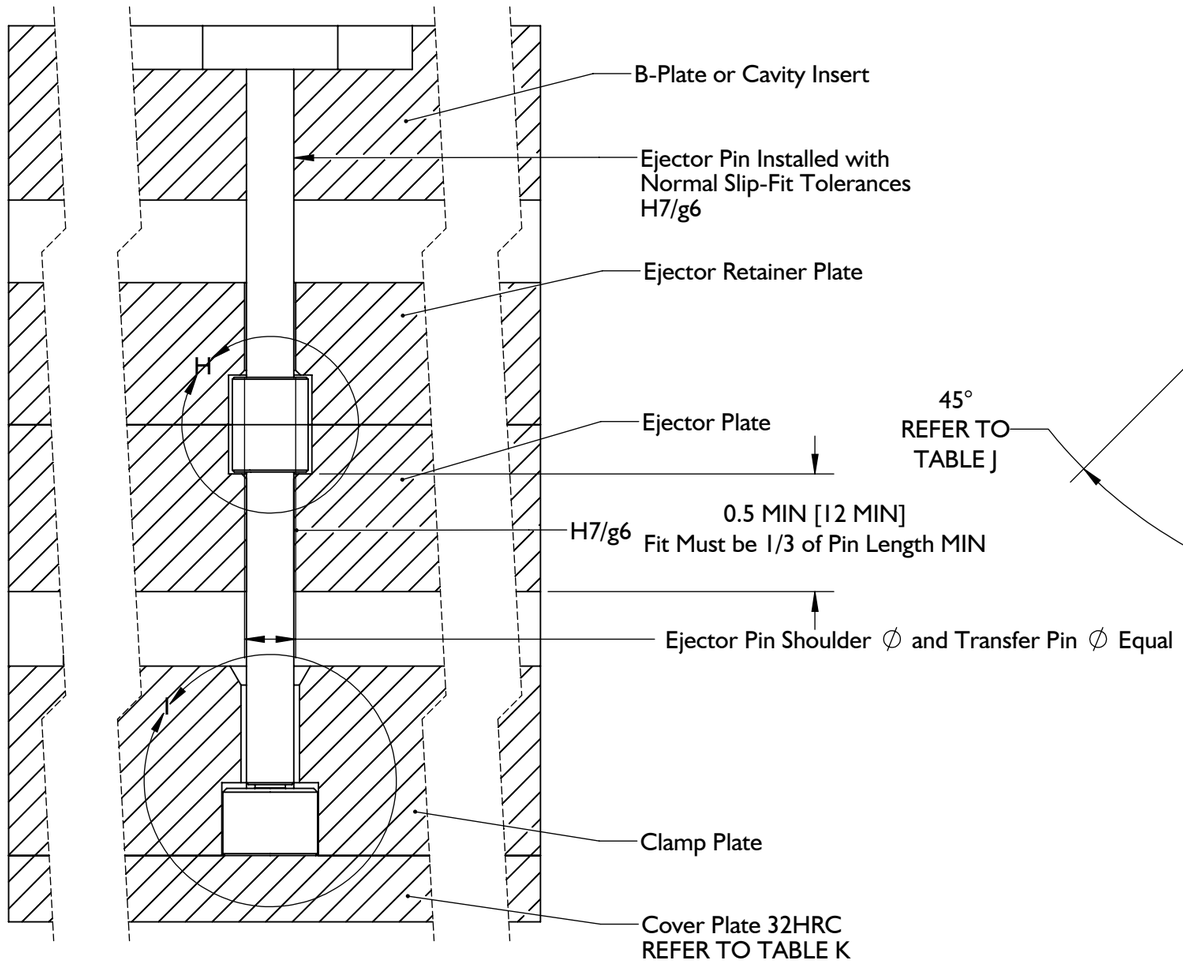

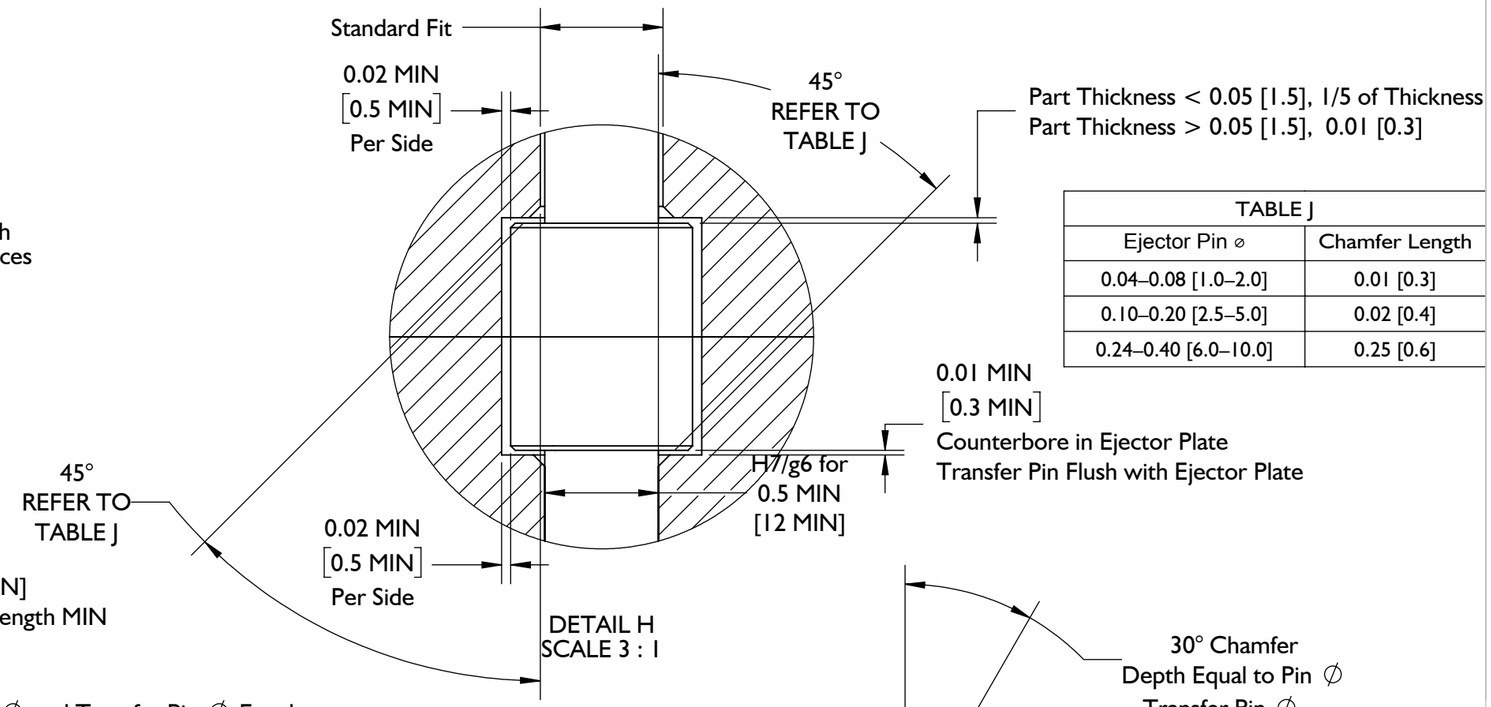

TABLE J	
Ejector Pin ⌀	Chamfer Length
0.04–0.08 [1.0–2.0]	0.01 [0.3]
0.10–0.20 [2.5–5.0]	0.02 [0.4]
0.24–0.40 [6.0–10.0]	0.25 [0.6]

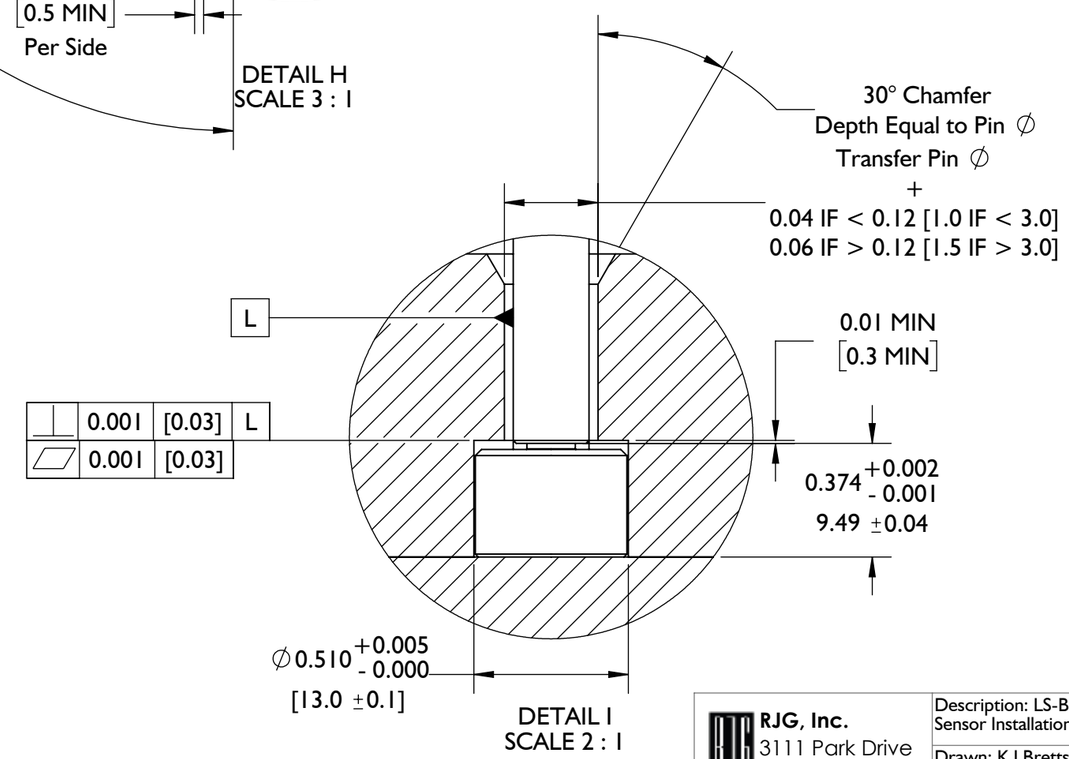

TABLE K	
Sensor Model	MIN Plate Thickness
LS-B-127-50	0.2 [5]
LS-B-127-125	0.2 [5]
LS-B-127-500	0.25 [6.0]
LS-B-127-2000	0.25 [6.0]

Refer to Product Manual for Cover Plate Alternatives

NOTES:
1. CLAMP PLATE APPLICATIONS REQUIRE GUIDED EJECTION
2. EJECTOR AND TRANSFER PIN CONCENTRICITY MUST BE WITHIN 0.030" [0.76] OR 10% OF EJECTOR PIN DIA, WHICHEVER IS SMALLER.
3. ENCLOSED EJECTOR BOX SUGGESTED.
4. DO NOT SCALE PRINT
5. BREAK ALL SHARP EDGES, 0.005 [0.03] R MAX
6. DIMENSIONS IN INCHES [MM], UNLESS NOTED
7. TOLERANCES UNLESS SPECIFIED:
   XXX = ±0.003 [0.08]
   XX = ±0.01 [0.3]
   ANGLES = ±3° 30°

RJG, Inc.
3111 Park Drive
231-947-3111
www.rjginc.com

Description: LS-B-127-XXXX Sensor Installation
Drawn: K.J.Brettschneider
Design:
Check: M.Groleau
Date: 07.21.2022

Drawing Title: LS-B-127-XXXX-06

LS-B-127-XXXX Single-Channel Sensor Installation—Clamp Plate/Head-to-Head Installation

NOTE: Lynx sensor electronics case mounted in the orientation as shown to allow access to the Lynx cable connection.
Refer to Product Manual for alternate electronics case mounting options.

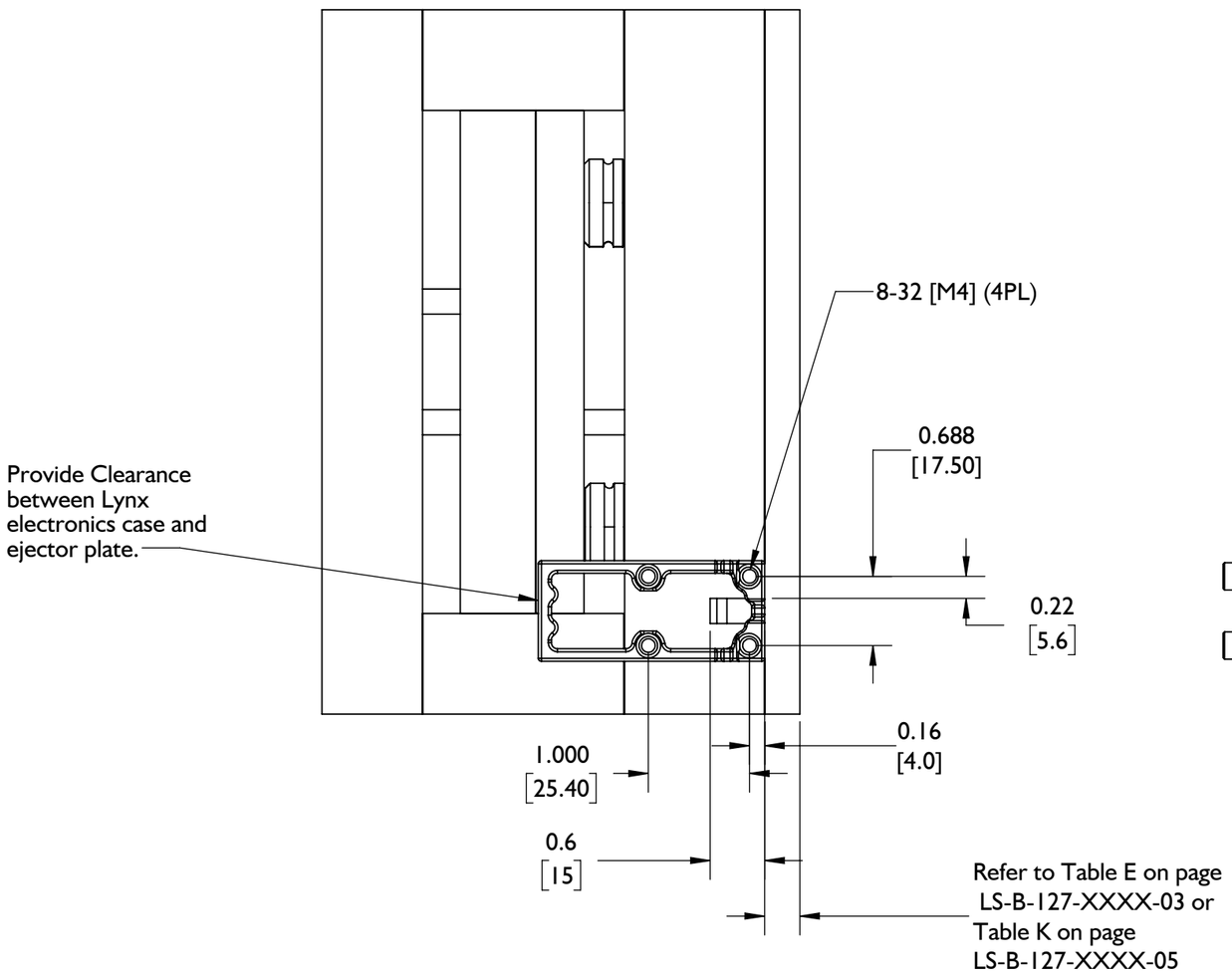

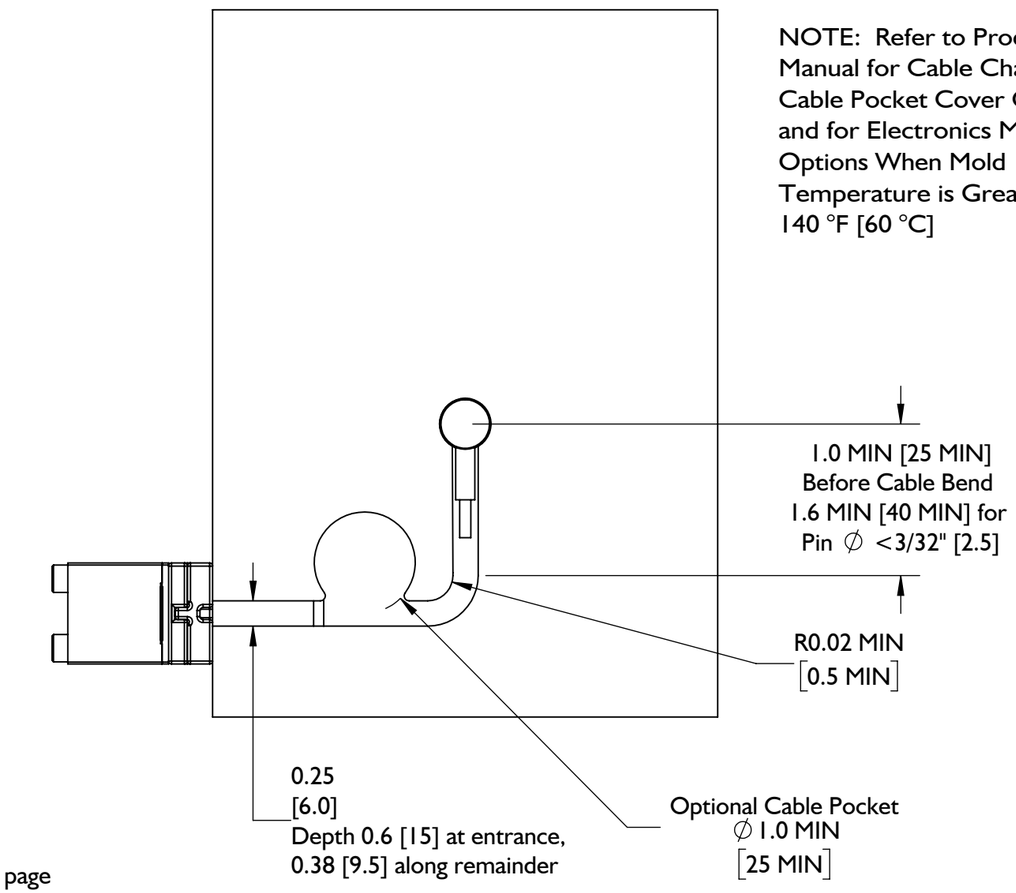

NOTE: Refer to Product Manual for Cable Channel and Cable Pocket Cover Options and for Electronics Mounting Options When Mold Temperature is Greater Than 140 °F [60 °C]

NOTES:
1. CLAMP PLATE APPLICATIONS REQUIRE GUIDED EJECTION
2. EJECTOR AND TRANSFER PIN CONCENTRICITY MUST BE WITHIN 0.030" [0.76] OR 10% OF EJECTOR PIN DIA, WHICHEVER IS SMALLER.
3. ENCLOSED EJECTOR BOX SUGGESTED.
4. DO NOT SCALE PRINT
5. BREAK ALL SHARP EDGES, 0.005 [0.03] R MAX
6. DIMENSIONS IN INCHES [MM], UNLESS NOTED
7. TOLERANCES UNLESS SPECIFIED:
   XXX = ±0.003 [0.08]
   XX = ±0.01 [0.3]
   ANGLES = ±3° 30'

RJG, Inc.
3111 Park Drive
231-947-3111
www.rjginc.com

Description: LS-B-127-XXXX Sensor Installation	
Drawn: K.J.Brettschneider	
Design:	
Check: M.Groleau	
Date: 07.21.2022	

Drawing Title: LS-B-127-XXXX-07

LS-B-127-XXXX Single-Channel Sensor Installation—Ejector Plate Installation

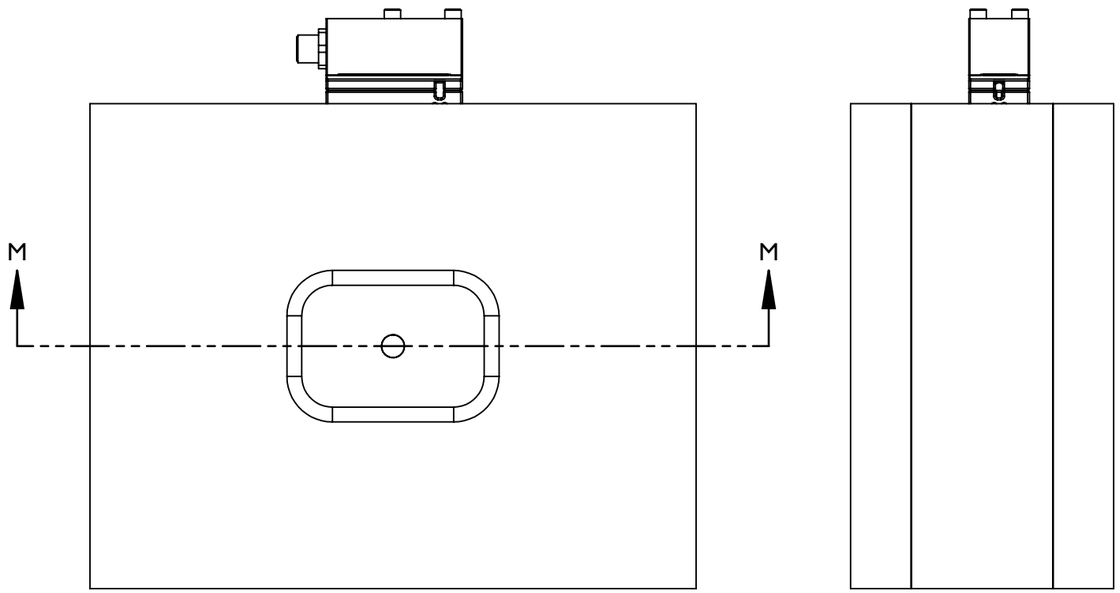

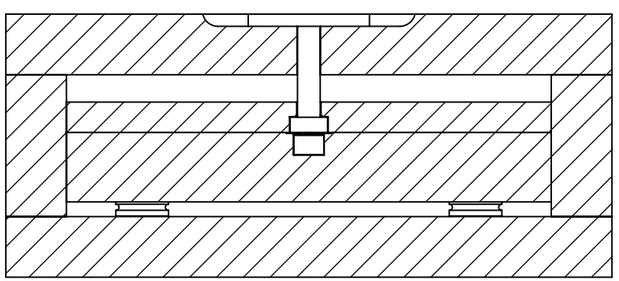

SECTION M-M
SCALE 1 : 2.5

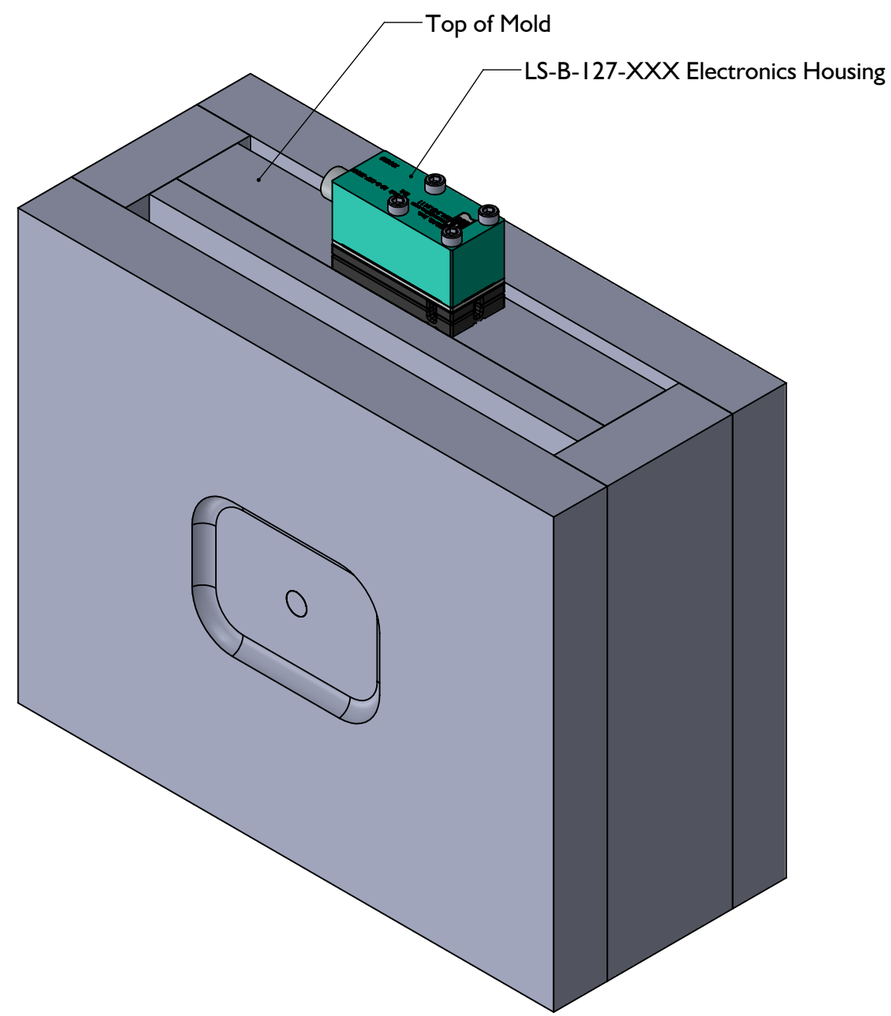

NOTES:
1. EJECTOR PIN AND SENSOR CONCENTRICITY MUST BE WITHIN 0.030" [0.76] OR 10% OF EJECTOR PIN DIA, WHICHEVER IS SMALLER.
2. DO NOT SCALE PRINT
3. BREAK ALL SHARP EDGES, 0.005 [0.03] R MAX
4. DIMENSIONS IN INCHES [MM], UNLESS NOTED
5. TOLERANCES UNLESS SPECIFIED:
   XXX = ±0.003 [0.08]
   XX = ±0.01 [0.3]
   ANGLES = ±3° 30°

RJG, Inc.
3111 Park Drive
231-947-3111
www.rjginc.com

Description: LS-B-127-XXXX Sensor Installation	
Drawn: K.J.Brettschneider	
Design:	
Check: M.Groleau	
Date: 07.21.2022	

Drawing Title: LS-B-127-XXXX-08

LS-B-127-XXXX Single-Channel Sensor Installation—Ejector Plate Installation

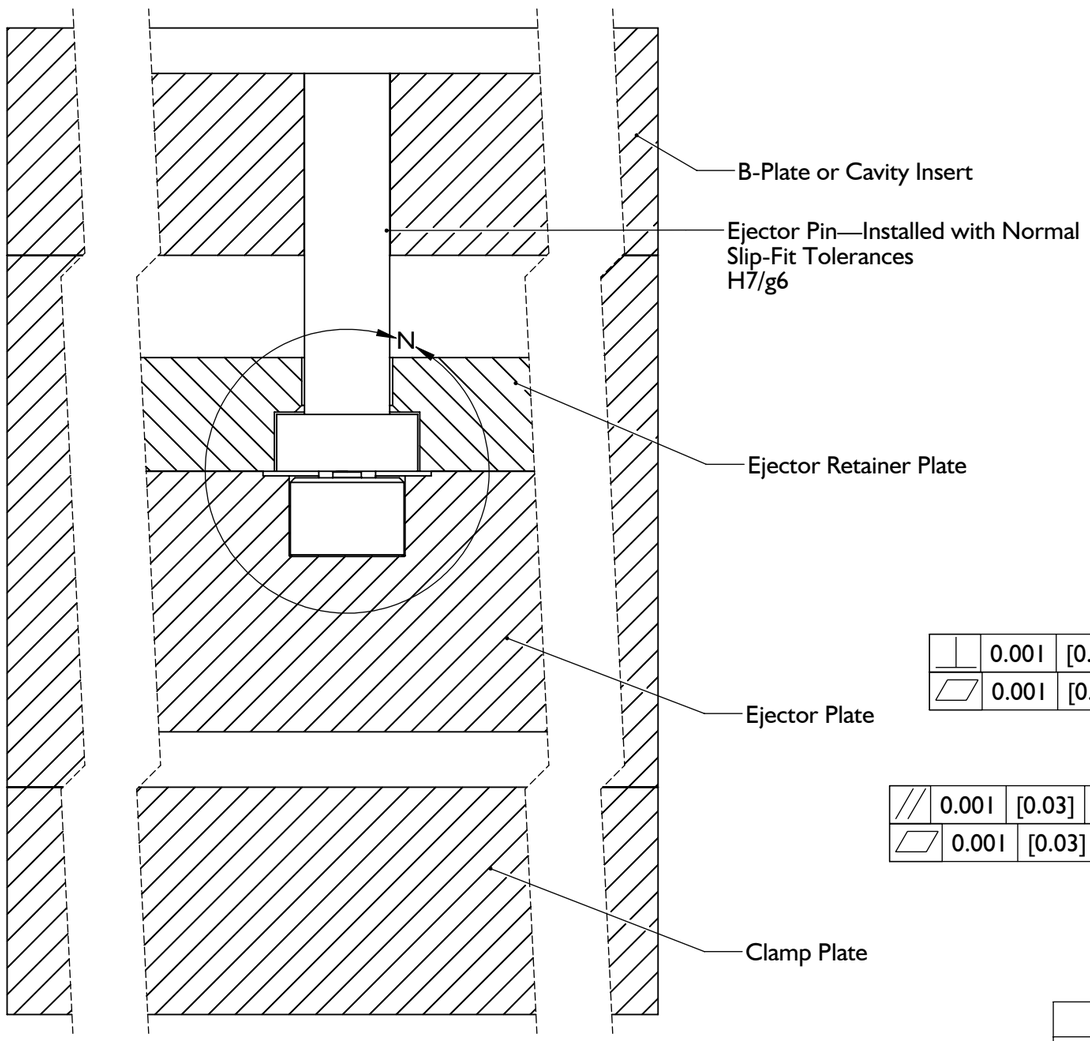

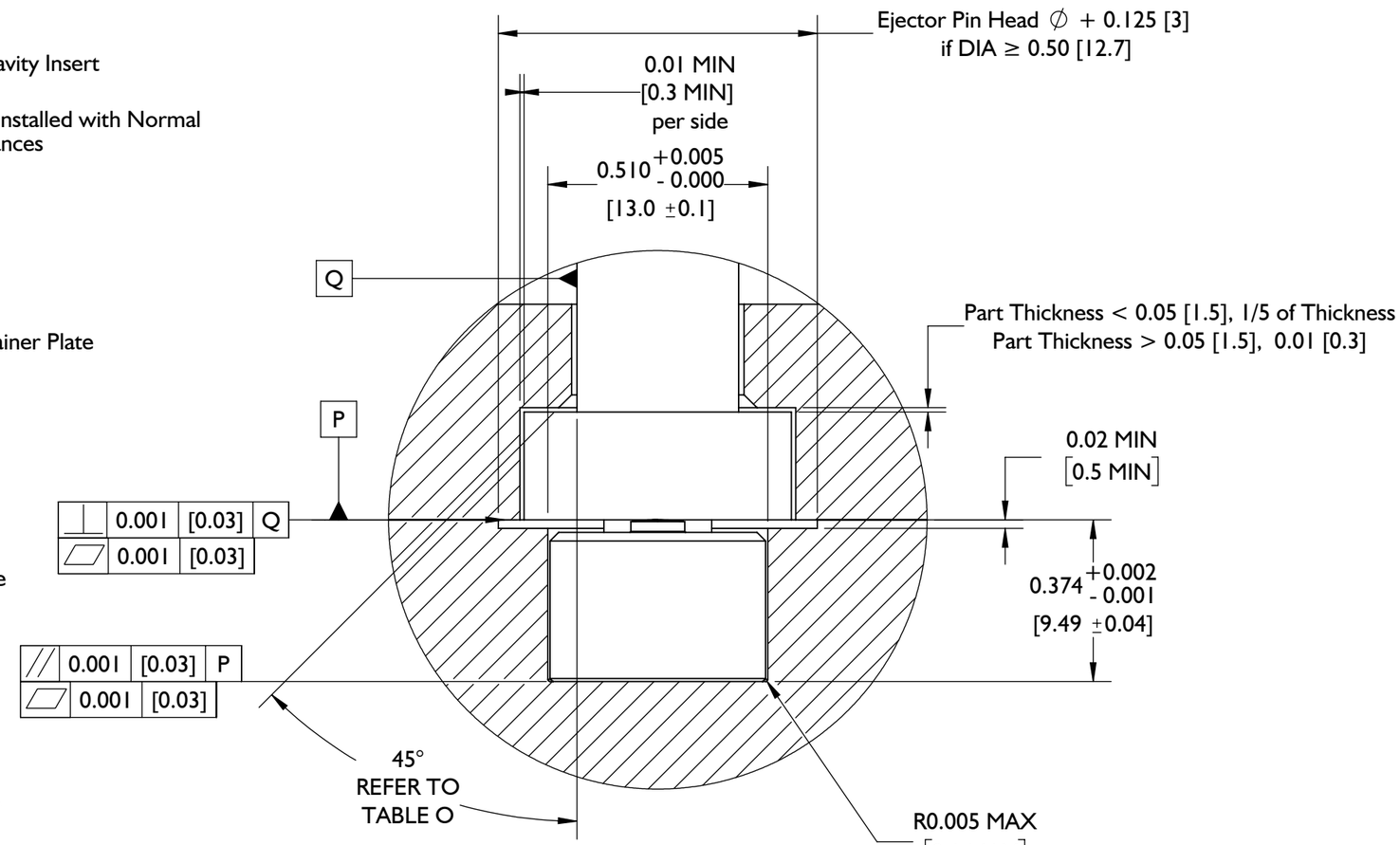

TABLE O	
Ejector Pin ⌀	Chamfer Length
0.04–0.08 [1.0–2.0]	0.01 [0.3]
0.10–0.20 [2.5–5.0]	0.02 [0.4]
0.24–0.40 [6.0–10.0]	0.25 [0.6]

DETAIL N
SCALE 3 : 1

NOTES:
1. EJECTOR PIN AND SENSOR CONCENTRICITY MUST BE WITHIN 0.030" [0.76] OR 10% OF EJECTOR PIN DIA, WHICHEVER IS SMALLER.
2. DO NOT SCALE PRINT
3. BREAK ALL SHARP EDGES, 0.005 [0.03] R MAX
4. DIMENSIONS IN INCHES [MM], UNLESS NOTED
5. TOLERANCES UNLESS SPECIFIED:
   XXX = ±0.003 [0.08]
   XX = ±0.01 [0.3]
   ANGLES = ±3° 30°

RJG, Inc.
3111 Park Drive
231-947-3111
www.rjginc.com

Description: LS-B-127-XXXX Sensor Installation	
Drawn: K.J.Brettschneider	
Design:	
Check: M.Groleau	
Date: 07.21.2022	

Drawing No: LS-B-127-XXXX-09

LS-B-127-XXXX Single-Channel Sensor Installation—Ejector Plate Installation

NOTE: Lynx sensor electronics case mounted in the orientation as shown to prevent damage to components.

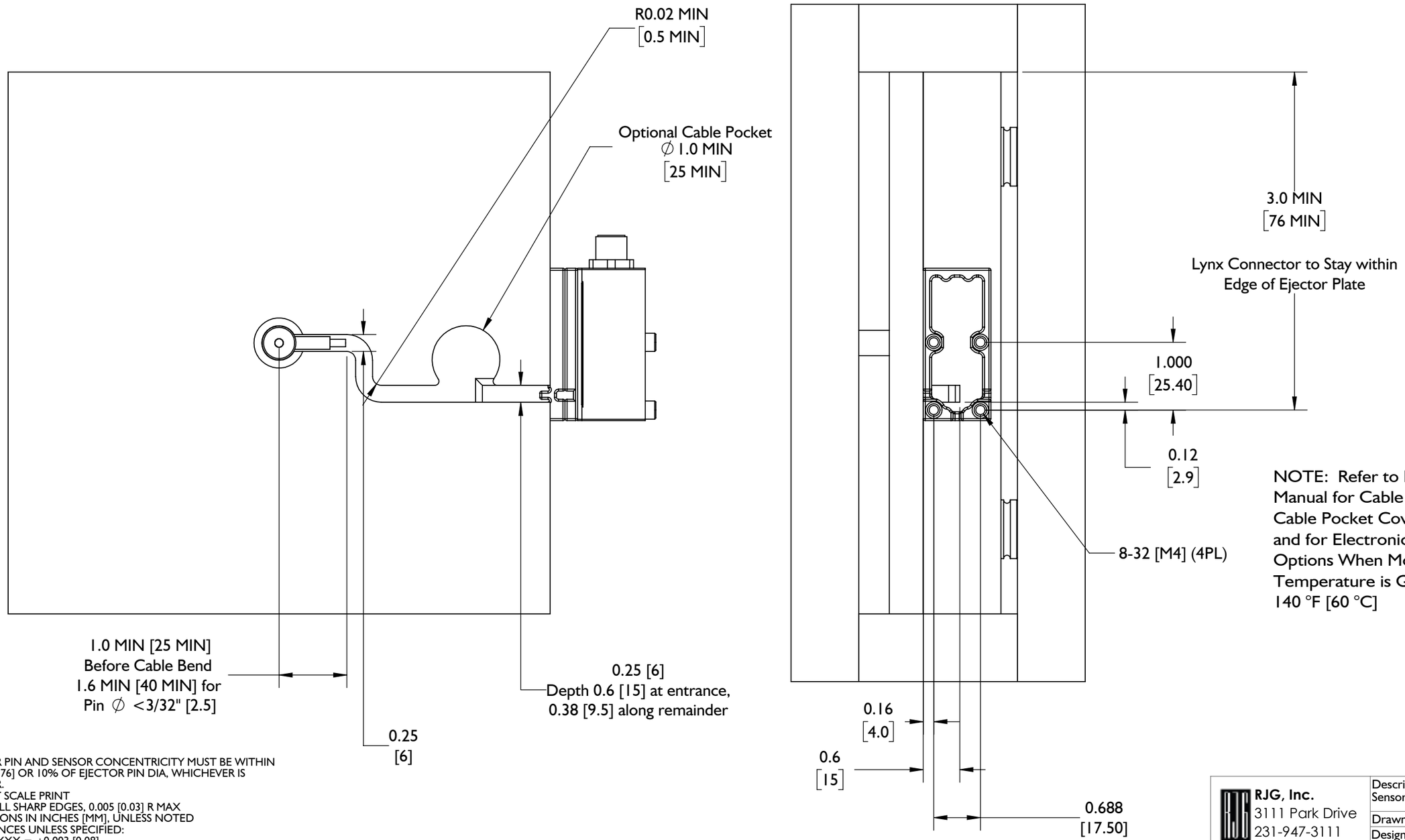

NOTE: Refer to Product Manual for Cable Channel and Cable Pocket Cover Options and for Electronics Mounting Options When Mold Temperature is Greater Than 140 °F [60 °C]

NOTES:
1. EJECTOR PIN AND SENSOR CONCENTRICITY MUST BE WITHIN 0.030" [0.76] OR 10% OF EJECTOR PIN DIA, WHICHEVER IS SMALLER.
2. DO NOT SCALE PRINT
3. BREAK ALL SHARP EDGES, 0.005 [0.03] R MAX
4. DIMENSIONS IN INCHES [MM], UNLESS NOTED
5. TOLERANCES UNLESS SPECIFIED:
   XXX = ±0.003 [0.08]
   XX = ±0.01 [0.3]
   ANGLES = ±3° 30'

RJG, Inc.
3111 Park Drive
231-947-3111
www.rjginc.com

Description: LS-B-127-XXXX Sensor Installation	
Drawn: K.J.Brettschneider	
Design:	
Check: M.Groleau	
Date: 07.21.2022	

Drawing Title: LS-B-127-XXXX-10

LS-B-127-XXXX Sensor Installation—Contoured Pin Angle Specification

NOTE: Contoured/angled pins (asymmetric) not to exceed 30° MAX unless pin design is symmetrical to provide even, downward pressure across pin surface to loading of sensor. Contact RJG Customer Support for assistance in verification of contoured/angled pin use.

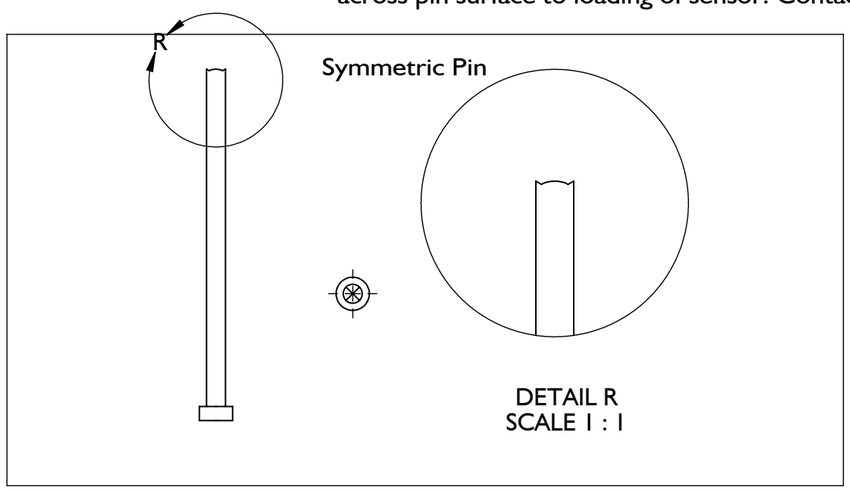

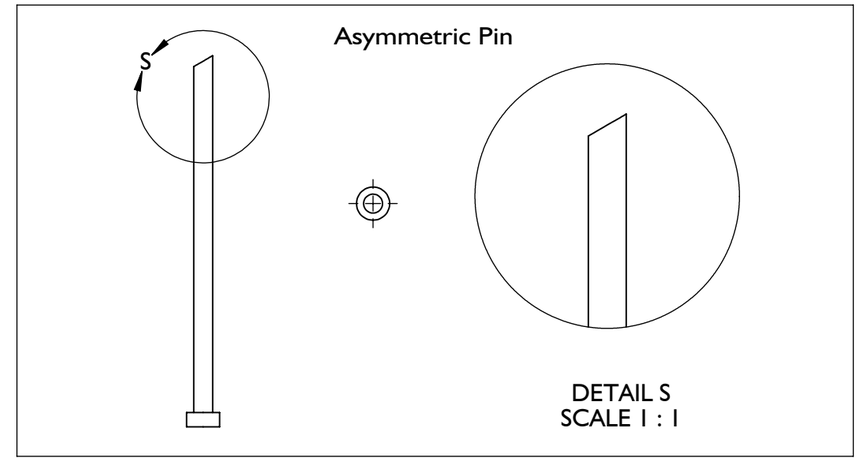

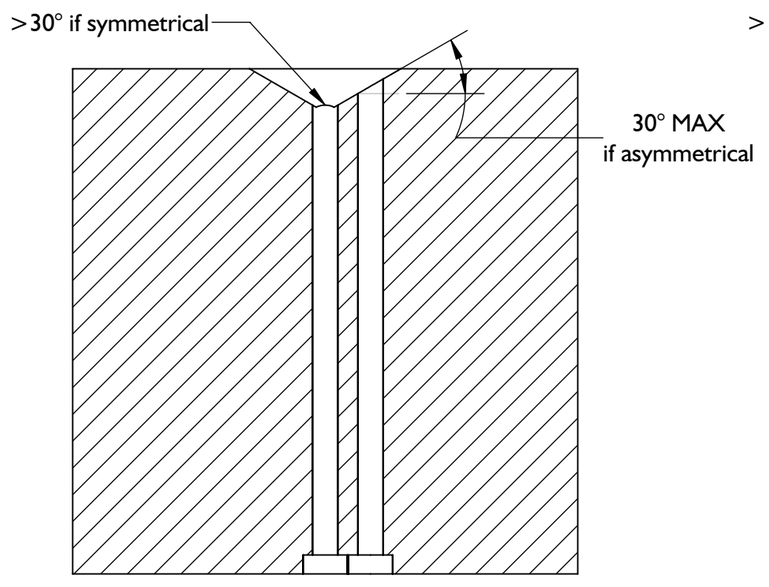

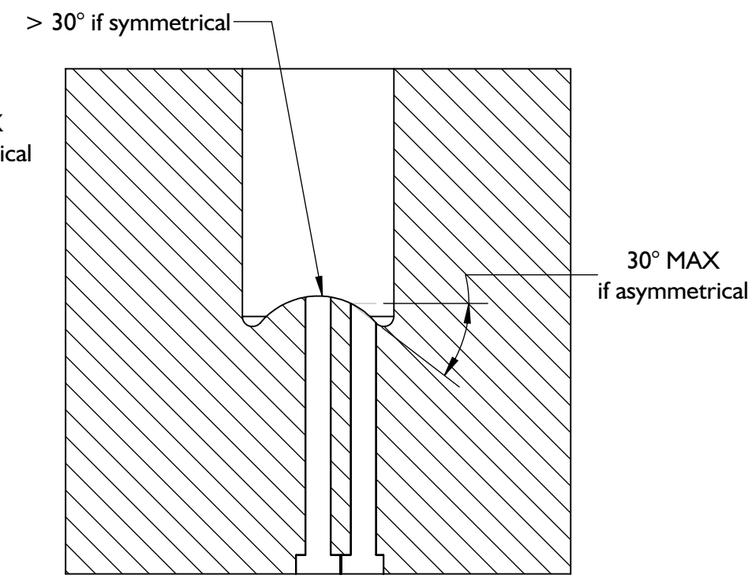

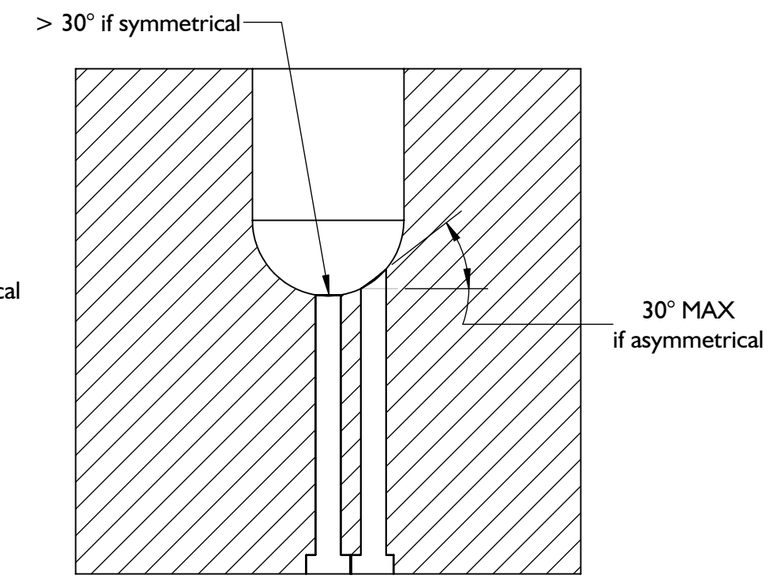

NOTES:
1. CLAMP PLATE APPLICATIONS REQUIRE GUIDED EJECTION
2. EJECTOR AND TRANSFER PIN CONCENTRICITY MUST BE WITHIN 0.030" [0.76] OR 10% OF EJECTOR PIN DIA, WHICHEVER IS SMALLER.
3. ENCLOSED EJECTOR BOX SUGGESTED.
4. DO NOT SCALE PRINT
5. BREAK ALL SHARP EDGES, 0.005 [0.03] R MAX
6. DIMENSIONS IN INCHES [MM], UNLESS NOTED
7. TOLERANCES UNLESS SPECIFIED:
   XXX = ±0.003 [0.08]
   XX = ±0.01 [0.3]
   ANGLES = ±3° 30°

RJG, Inc.
3111 Park Drive
231-947-3111
www.rjginc.com

Description: LS-B-127-XXXX Sensor Installation	
Drawn: K.J.Brettschneider	
Design:	
Check: M.Groleau	
Date: 07.21.2022	

Drawing Title: LS-B-127-XXXX-11

LS-B-127-XXXX-H Sensor Installation—Sensor Electronics Housing Installation for High Temperatures

NOTE: The sensor electronics housing must be kept below 140 °F (60 °C) for all LS-B-127-XXXX and LS-B-127-XXXX-H sensor models. Refer to the drawing below as a guide; RJG does NOT provide riser assembly pictured below—riser assembly and design is responsiblity of customer. Contact RJG Customer Support for assistance with high-temperature sensor electronics housing protection designs.

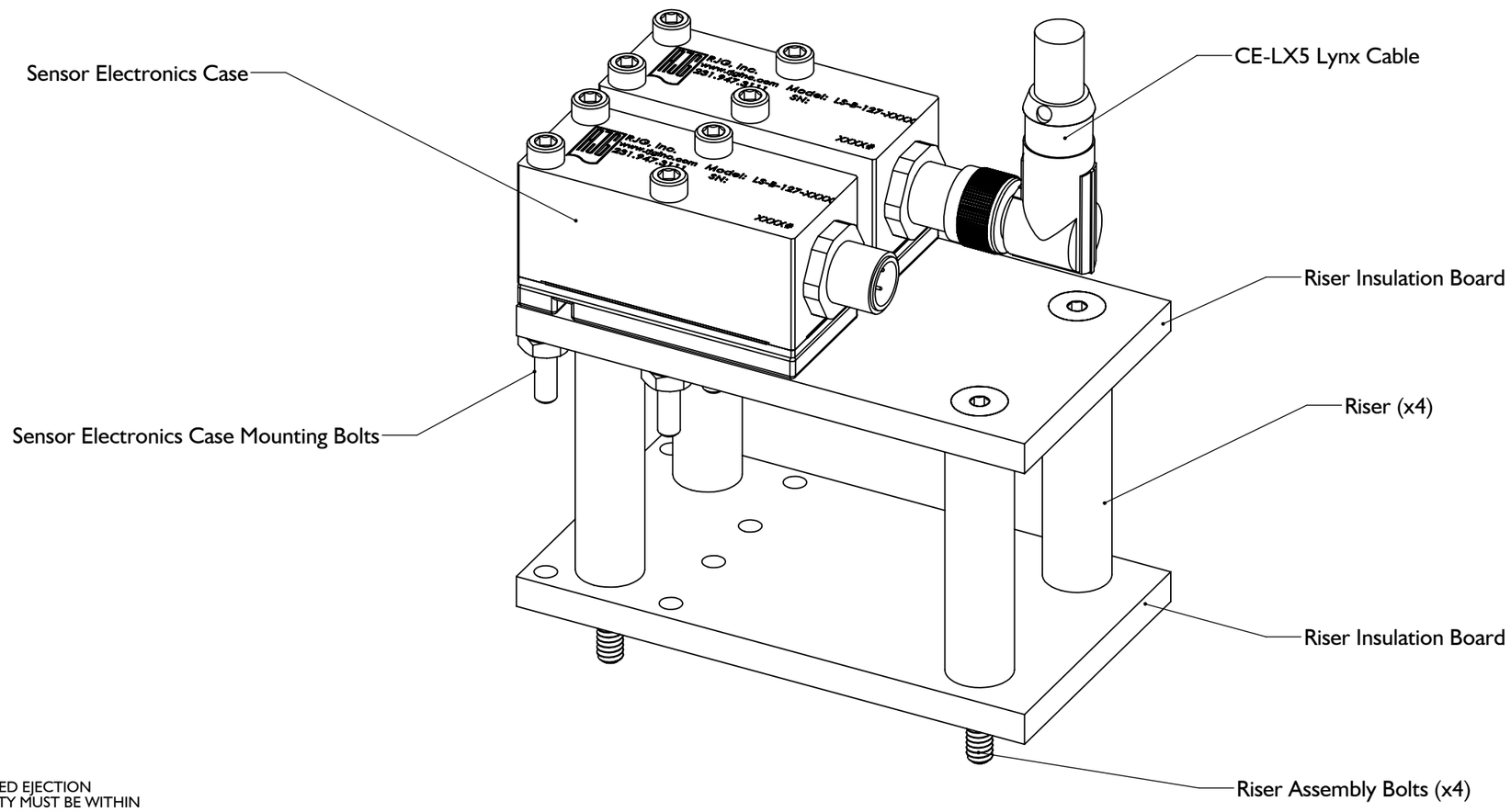

NOTES:
1. CLAMP PLATE APPLICATIONS REQUIRE GUIDED EJECTION
2. EJECTOR AND TRANSFER PIN CONCENTRICITY MUST BE WITHIN 0.030" [0.76] OR 10% OF EJECTOR PIN DIA, WHICHEVER IS SMALLER.
3. ENCLOSED EJECTOR BOX SUGGESTED.
4. DO NOT SCALE PRINT
5. BREAK ALL SHARP EDGES, 0.005 [0.03] R MAX
6. DIMENSIONS IN INCHES [MM], UNLESS NOTED
7. TOLERANCES UNLESS SPECIFIED:
   XXX = ±0.003 [0.08]
   XX = ±0.01 [0.3]
   ANGLES = ±3° 30°

RJG, Inc.
3111 Park Drive
231-947-3111
www.rjginc.com

Description: LS-B-127-XXXX Sensor Installation	
Drawn: K.J.Brettschneider	
Design:	
Check: M.Groleau	
Date: 07.21.2022	